序号	修 改 内 容	修改	审核	批准	日 期

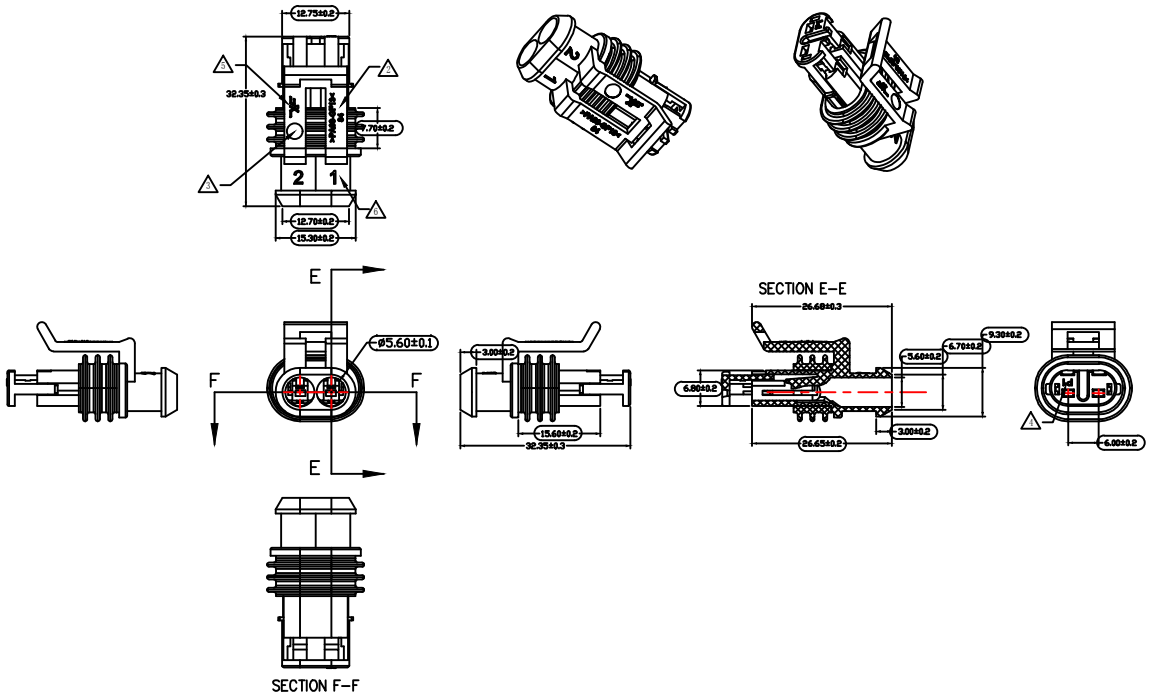

400-1000MM	XX
120-400MM	XX
60-120MM	±0.5
30-60MM	±0.3
6-30MM	±0.2
0-6MM	±0.1

NOTE:
1. The font height is 0.1mm
2. There is no bad injection molding, crush, deformation and so on on the surface of the product.
3. ( ) QC Control

XF				item type	Connectors	Client	
				name	XF7021-1.5-21		
设 计	姚春裕	date	2019.11.02	color	Black	page	1
校 对	杨建刚	date	2019.11.02	material	PA66-GF	scale	
核 准	张亦翔	date	2019.11.03	weight		version	2019.11