list	revisions	REMARK	DWN	APVD	DATE

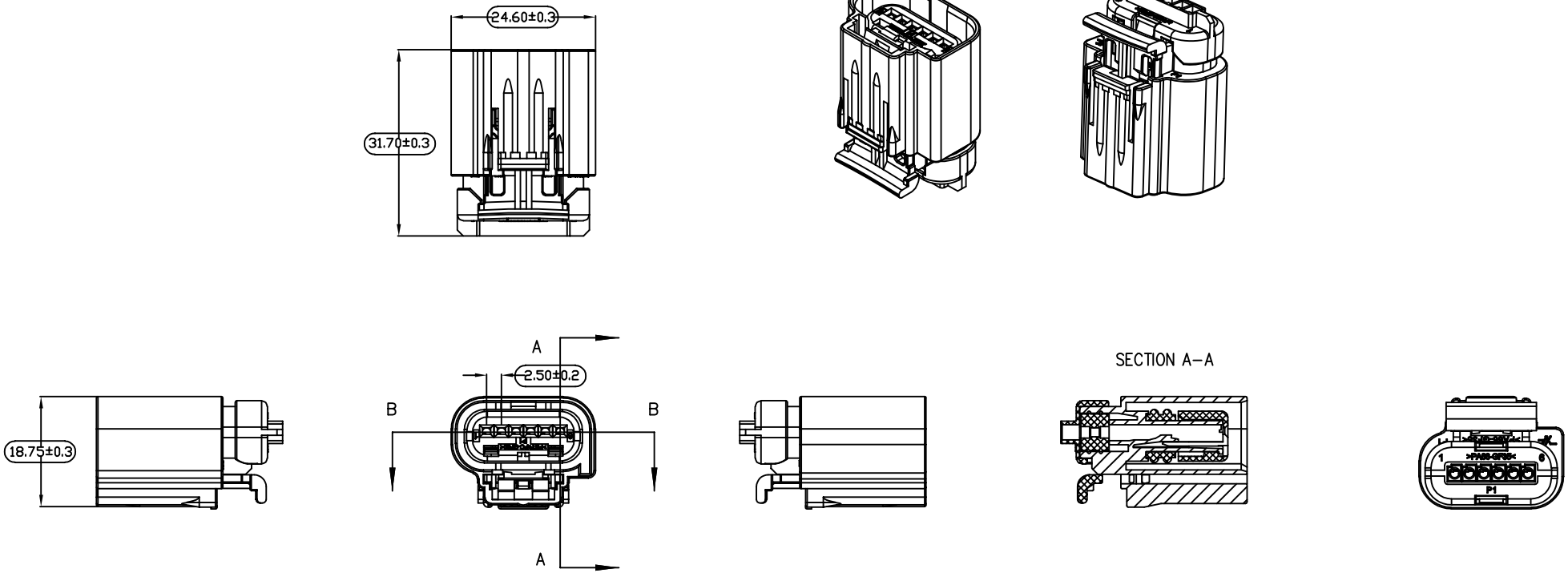

NOTE:
1. The font height is 0.1mm
2. There is no bad injection molding, crush, deformation and so on on the surface of the product.
3. ( ) QC Control
4. OEM: 1-1419168-2

XF				item type	Cover	Client	
				name	XF70612-0.6-21		
设 计	赖春裕	date	2019.9.02	color	Black	page	1
校 对	杨建刚	date	2019.9.02	material	PA66+GF35	scale	
核 准	张亦翔	date	2019.9.03	weight		version	2019.9