list	revisions	REMARK	DWN	APVD	DATE

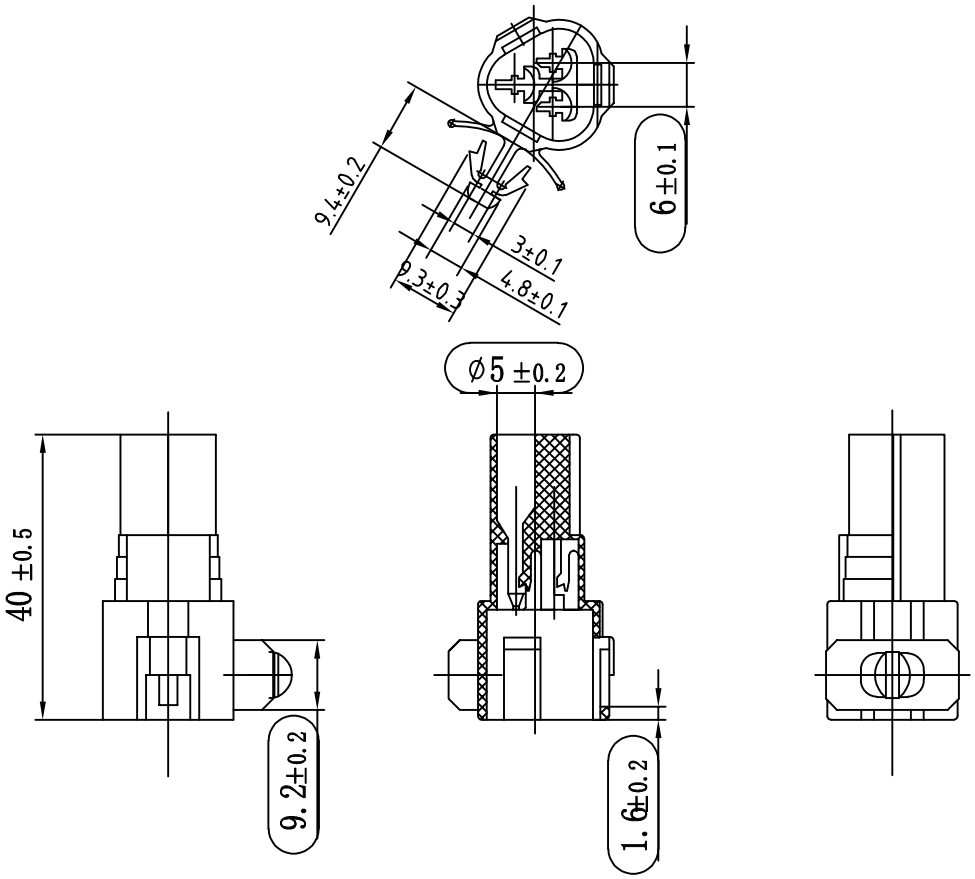

NOTE:
1. The font height is 0.1mm
2. There is no bad injection molding, crush, deformation and so on on the surface of the product.
3. ( ) QC Control
4. OEM: 6187-3271

XF				item type	Connectors	Client	
				name	XF7035A-2.2-11WT		
设 计	zhang	date	2018.11.12	color	White	page	1
校 对	yang	date	2018.11.12	material	PBT	scale	
核 准	zhang	date	2018.11.13	weight		version	2018.11