list	revisions	REMARK	DWN	APVD	DATE

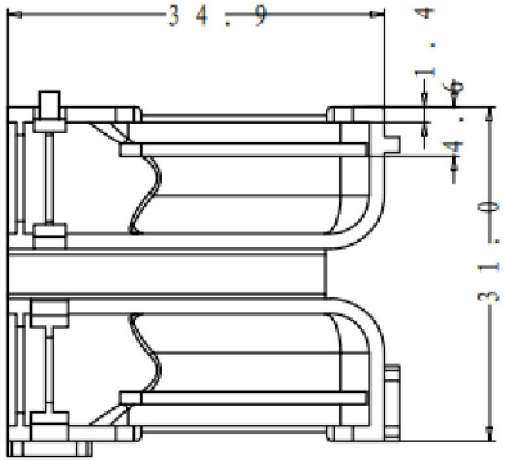

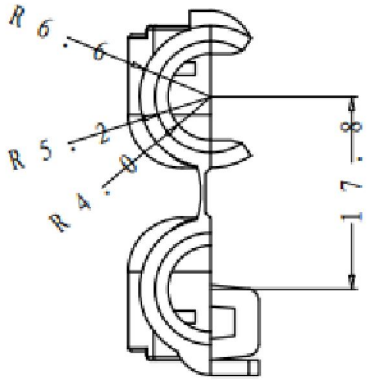

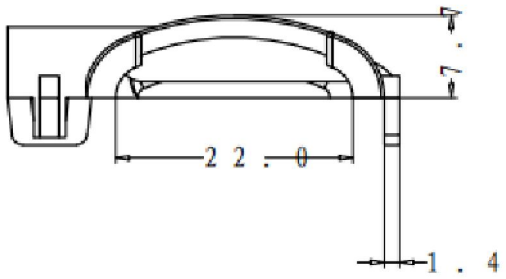

NOTE:
1. The font height is 0.1mm
2. There is no bad injection molding, crush, deformation and so on on the surface of the product.
3. ( ) QC Control

DIMENSIONAL RANGE (MM)									CHART E1
FROM TO	> 0 20	> 20 30	> 30 70	> 70 100	>100 150	>150 200	>200 250	>250 300	>300 400
TOLERANCE UNLESS OTHERWISE SPECIFIED									
	±0.15	±0.2	±0.3	±0.4	±0.5	±0.6	±0.8	±1	±1.2
ANGULAR TOLERANCE ±2°									

XF				item type	Tail Cap	Client	
				name	XF7807064		
设 计	赖春裕	date	2019.9.02	color	Black	page	1
校 对	杨建刚	date	2019.9.02	material	PA66	scale	
核 准	张亦翔	date	2019.9.03	weight		version	2019.9