list	revisions	REMARK	DWN	APVD	DATE

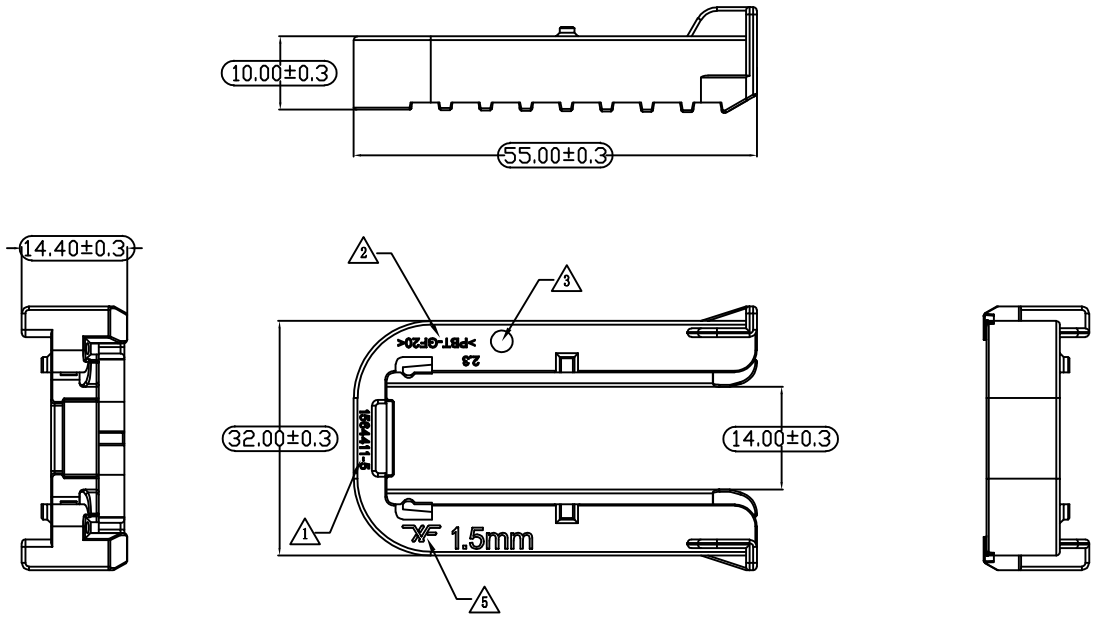

NOTE:
1. The font height is 0.1mm
2. There is no bad injection molding, crush, deformation and so on on the surface of the product.
3. ( ) QC Control
4. OEM: 1564411-5

XF				item type	Buckle	Client	
				name	XF1564411-5		
设 计	zhang	date	2018.11.19	color	Gray	page	1
校 对	yang	date	2018.11.19	material	PBT-GF20	scale	
核 准	zhang	date	2018.11.19	weight		version	2018.11