list	revisions	REMARK	DWN	APVD	DATE

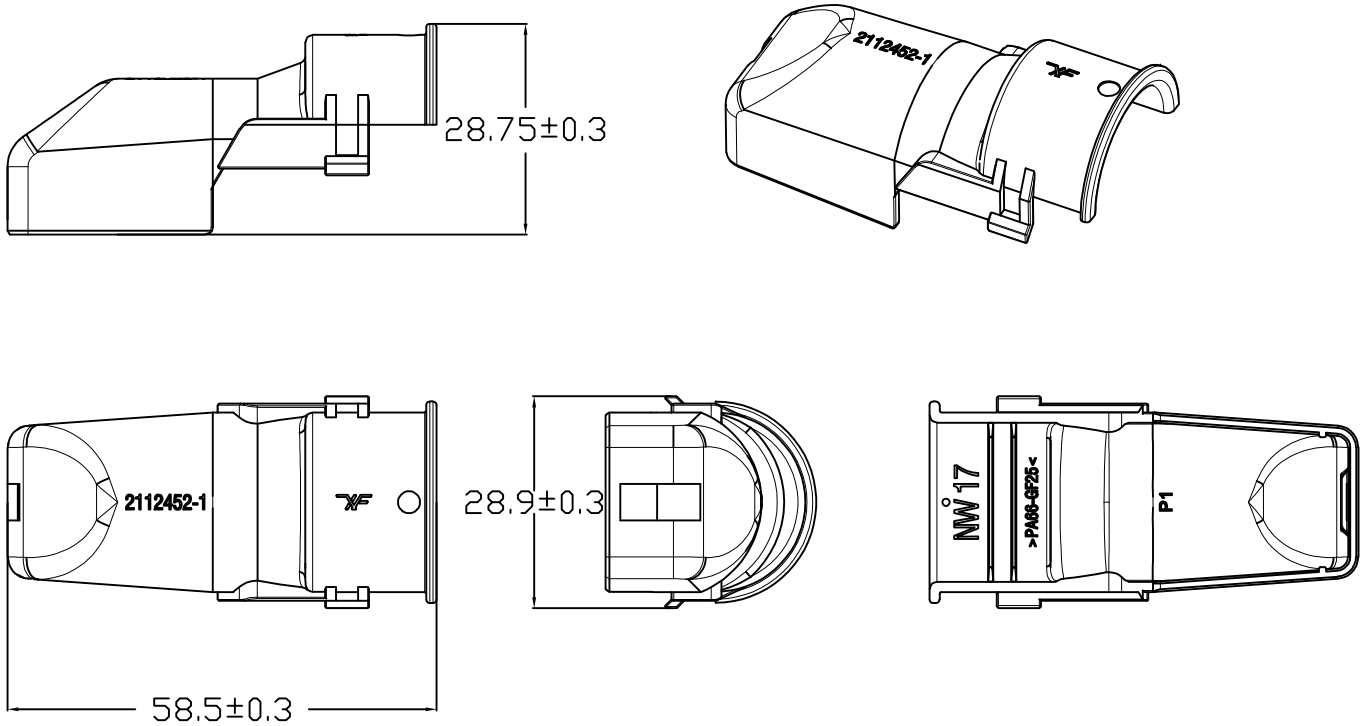

NOTE:
1. The font height is 0.1mm
2. There is no bad injection molding, crush, deformation and so on on the surface of the product.
3. QC Control

XF				item type	Cover	Client	
				name	XF2112452-1		
设 计	赖春裕	date	2019.9.02	color	Black	page	1
校 对	杨建刚	date	2019.9.02	material	PA66+GF	scale	
核 准	张亦翔	date	2019.9.03	weight		version	2019.9