list	revisions	REMARK	DWN	APVD	DATE

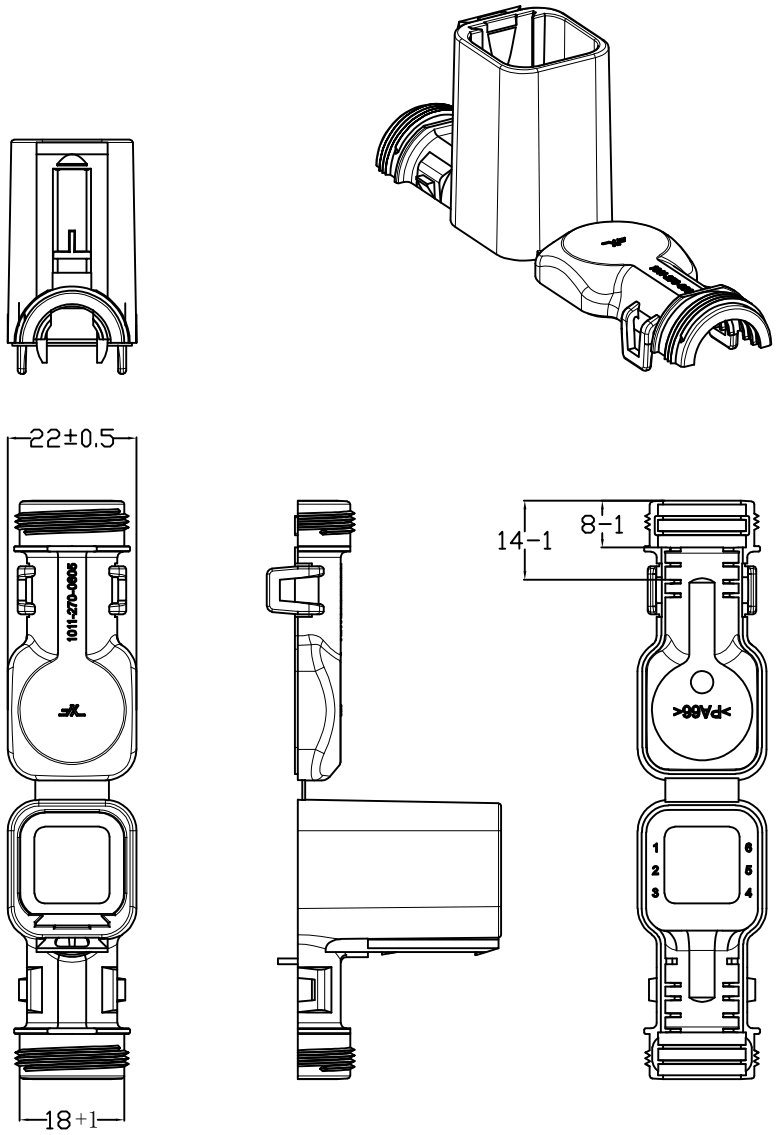

NOTE:
1. The font height is 0.1mm
2. There is no bad injection molding, crush, deformation and so on on the surface of the product.
3. QC Control
4. OEM: 1011-270-0605

XF				item type	cover	Client	
				name	XF1011-270-0605		
设 计	zhang	date	2018.11.03	color	Black	page	1
校 对	yang	date	2018.11.03	material	PA66	scale	
核 准	zhang	date	2018.11.03	weight		version	2018.11