list	revisions	REMARK	DWN	APVD	DATE

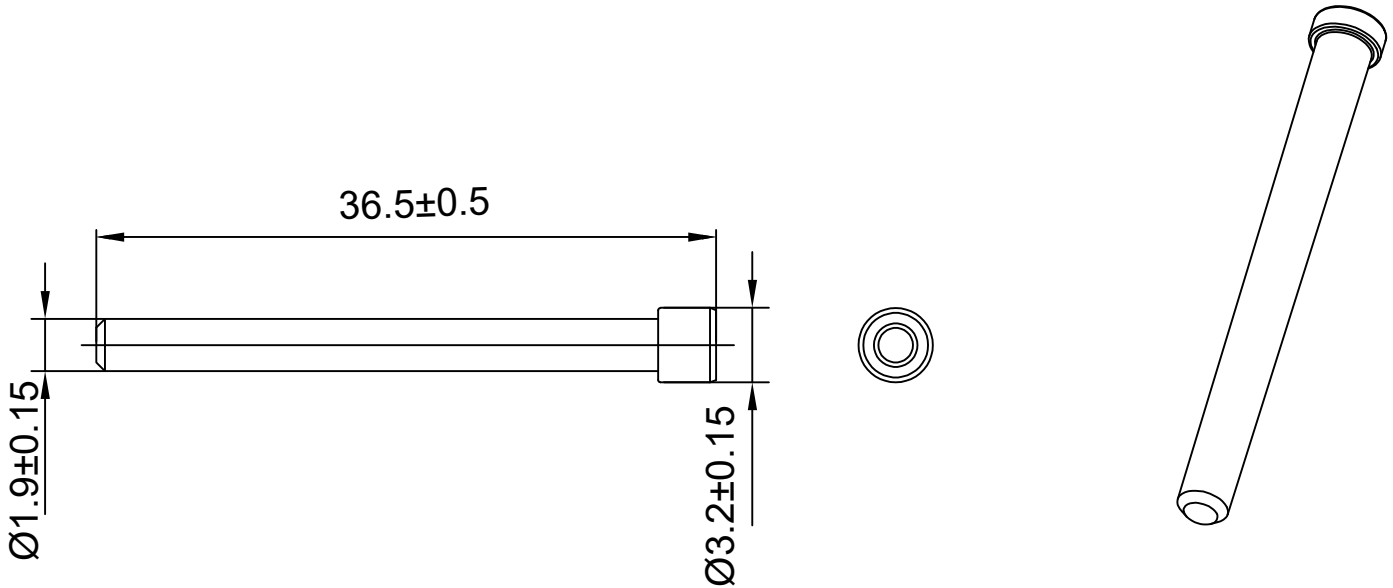

NOTE:
1. The font height is 0.1mm
2. There is no bad injection molding, crush, deformation and so on on the surface of the product.
3. QC Control
4. OEM: 0413-003-1605

XF				item type	PLUG , SEALING	Client	
				name	XF0413-003-1605		
设 计	赖春裕	date	2021.5.13	color	blue	page	1
校 对	杨建刚	date	2021.5.13	material	PBT	scale	
核 准	张亦翔	date	2021.5.13	weight		version	2021