list	revisions	REMARK	DWN	APVD	DATE

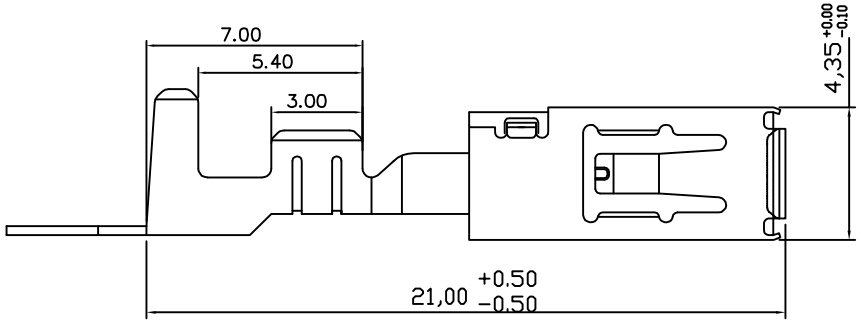

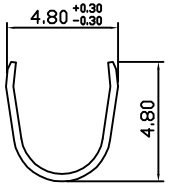

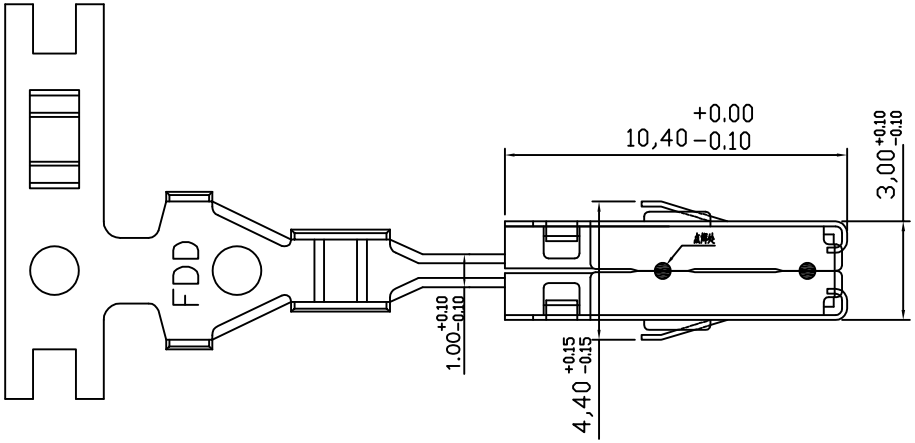

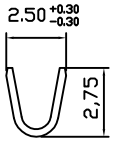

NOTES: UNLESS OTHERWISE SPECIFIED

1. MATERIAL: COPPER ALLOY

2. RoHS COMPLIANT

XF

NOTE:					
0-3 ±0.10 >3-6 ±0.15 >6-18 ±0.20 18以上 ±0.25 Angle ±2°		Name	TERMINAL		
		Number	FD1-968855-1		
	SIGNATURES	DATE			
DRAWN	YUAN	2021.1.20	VERSION	A	
CHECKED	ZHANG	2021.1.20	Unit	mm	
APPROVAL	TONG	2021.1.20	Proportion	1:1	