list	revisions	REMARK	DWN	APVD	DATE

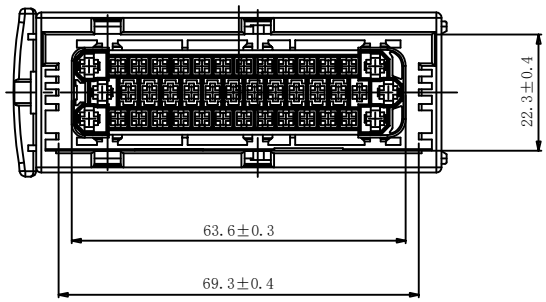

B-B

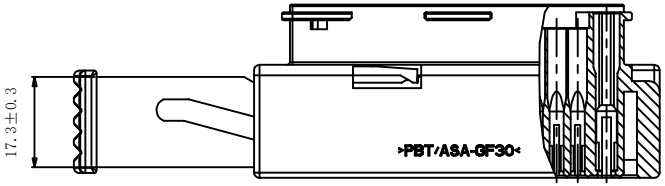

A-A

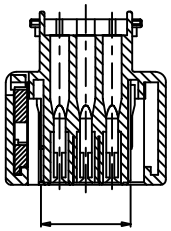

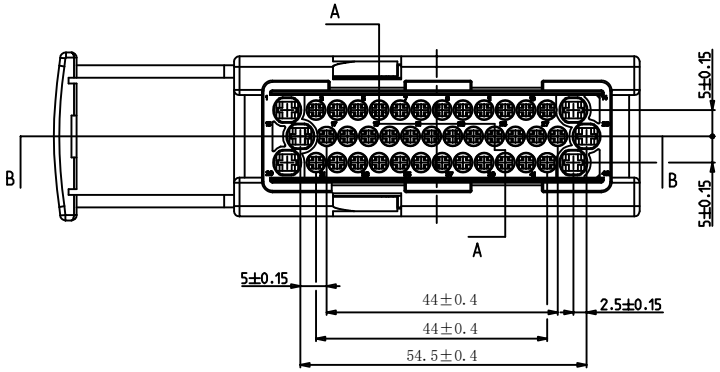

NOTE:
1. The font height is 0.1mm
2. There is no bad injection molding, crush, deformation and so on on the surface of the product.
3. ( ) QC Control
4. OEM: 1-967281-1

XF				item type	Connectors	Client	
				name	XF7422-1.5&2.8-21Bk		
设 计	zhang	date	2019.01.03	color	black	page	1
校 对	yang	date	2019.01.03	material	PBT-GF30	scale	
核 准	zhang	date	2019.01.03	weight		version	2019.01