list	revisions	REMARK	DWN	APVD	DATE
1					
2					

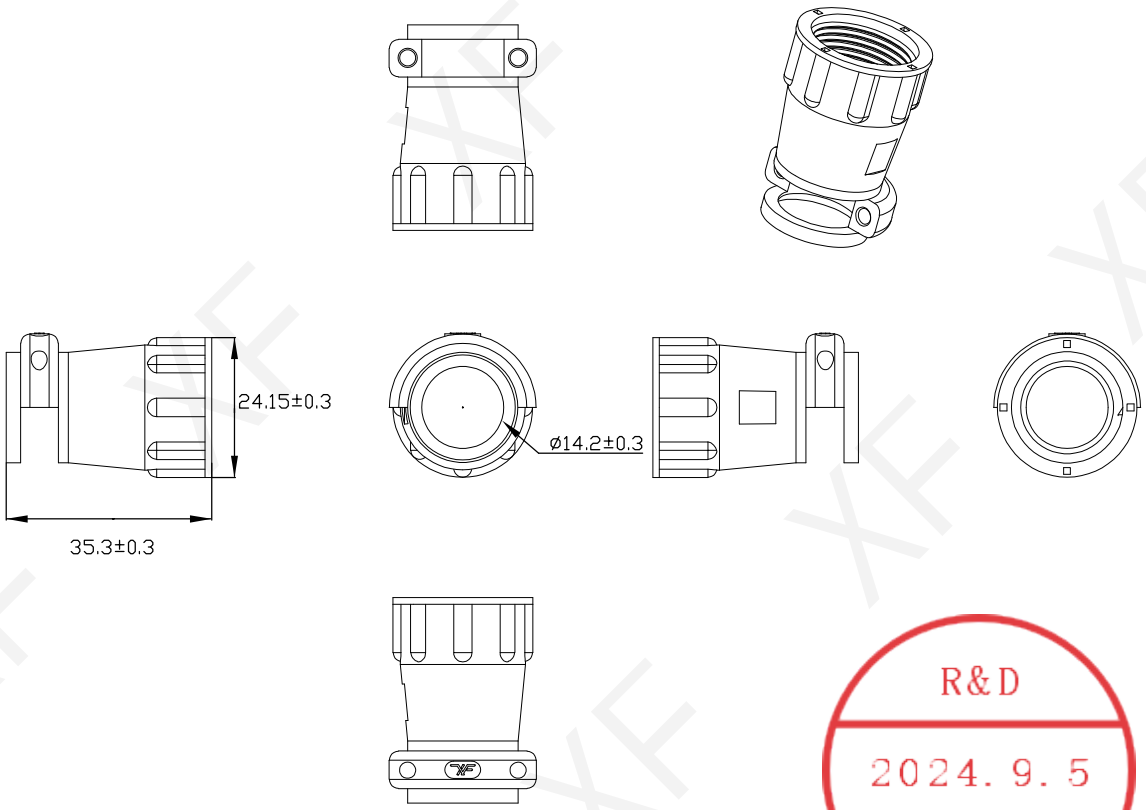

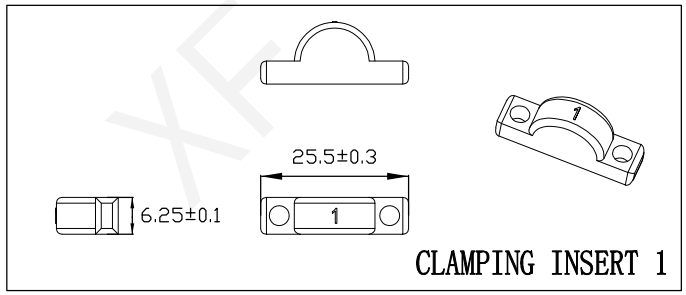

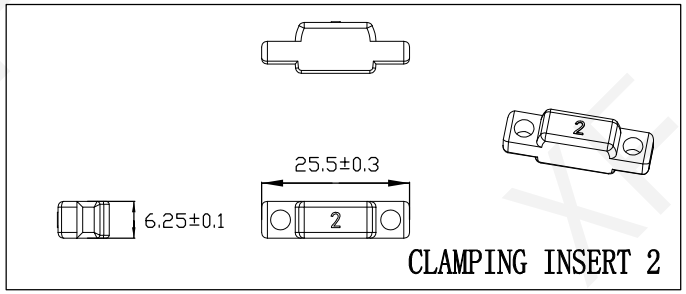

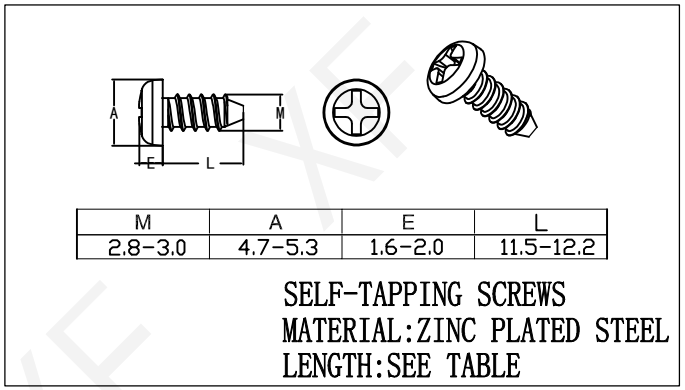

R&D
2024.9.5
Tony

NOTE:
1. The font height is 0.1mm
2. There is no bad injection molding, crush, deformation and so on on the surface of the product
3. QC Control
4. CABLE CLAMPING AREA ADJUSTABLE FROM .010 TO .161 SQ IN BY REVERSING CLAMPING INSERTS.(2 INSERTS SUPPLIED)
5. Flame retardant rating: UL94-V0
6. OEM: 206966-7

XF				item type	Connectors	Client	
				name	XF206966-7		
设 计	zhang	date	2024.9.5	color	Black	page	1
校 对	yang	date	2024.9.5	material	PA66+GF15	scale	
核 准	zhang	date	2024.9.5	weight		version	2024.9