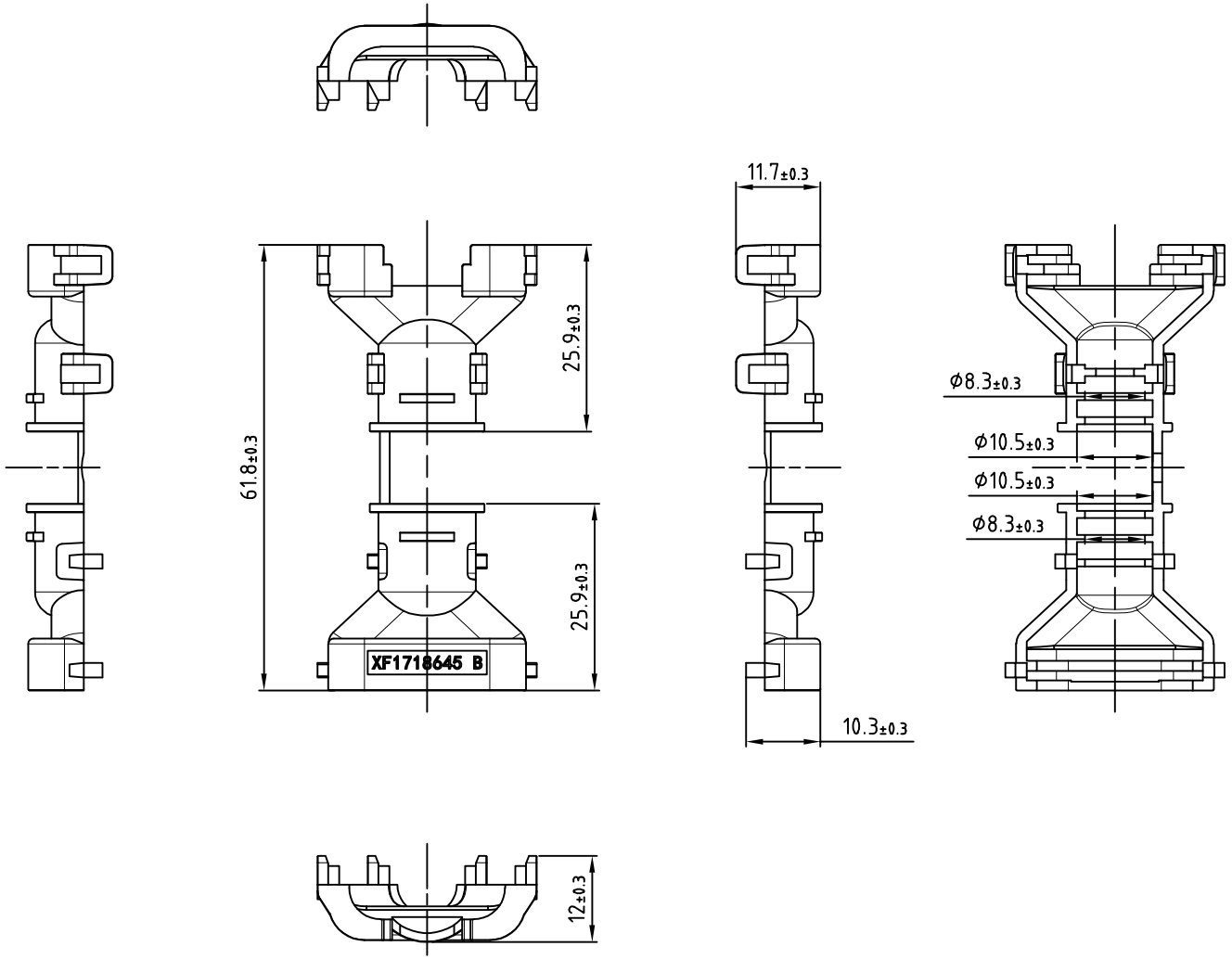

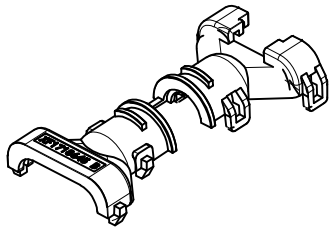

NOTES:

1. The font height is 0.1mm
2. There is no bad injection molding, crush, deformation and so on on the surface of the product.

宁波翔沣电气有限公司 NINGBO XF ELECTRONIC CO.,LTD					Name	Backshell
					DrawingNo	1718645B
					Material	PA66
Design	Lai	2025.3	Revision	01	Color	Black
Proofread	Yang	2025.3			Weight Kg	
Approval	Zhang	2025.3	Scale	1.5:1		Pages