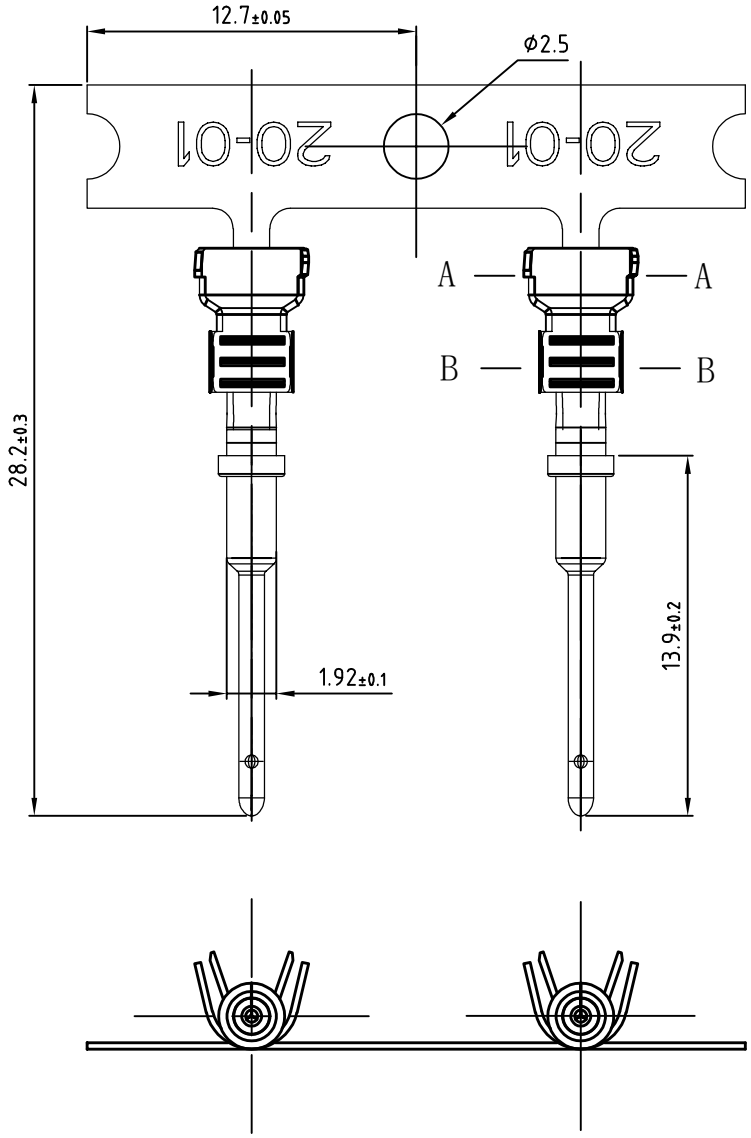

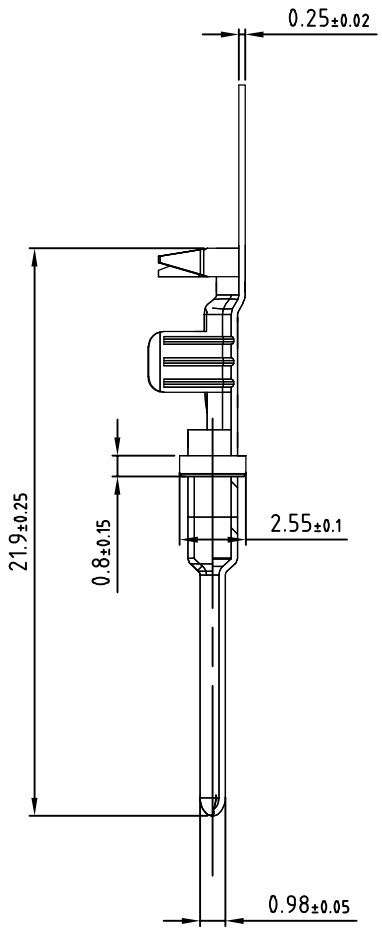

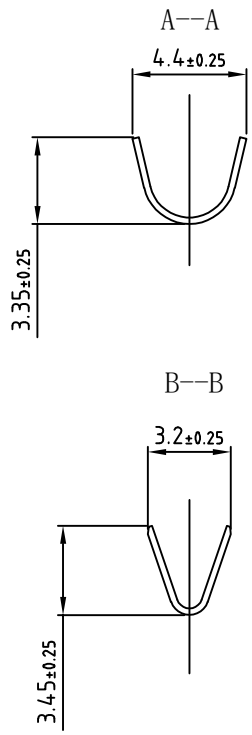

NOTES:

1. UNLESS OTHERWISE SPECIFIED
2. RoHS COMPLIANT

宁波翔沣电气有限公司 NINGBO XF ELECTRONIC CO.,LTD					Name	Terminal
					DrawingNo	TS1060-20-0122
					Material	CuSn6
Design	Zhang	2025.4	Revision	01	Color	
Proofread	Yang	2025.4			Weight Kg	
Approval	Zhang	2025.4	Scale	5:1		Pages