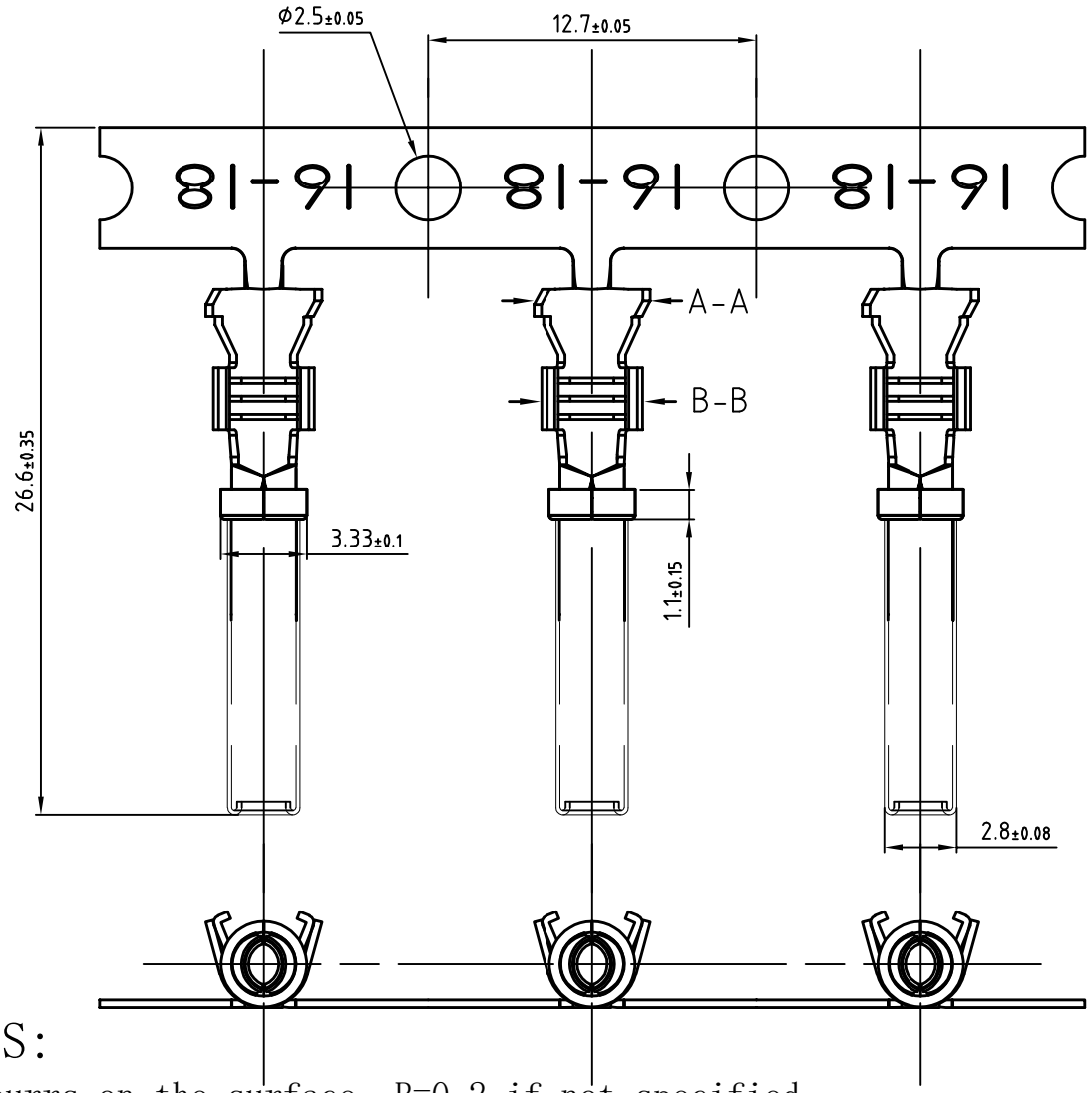


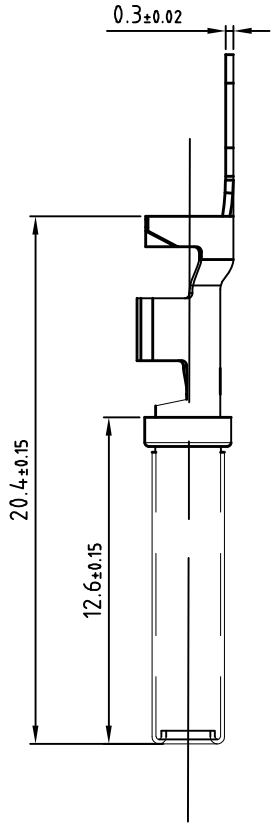


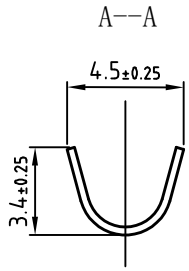


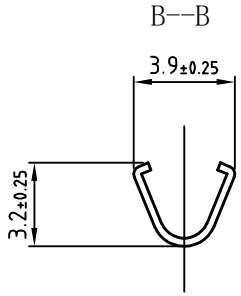


NOTES:

1. No burrs on the surface, R=0.2 if not specified
2. Material:CuSn6
3. Electroplating specifications:electroplating after stamping,nickel base 1-2.5um, local gold plating 3u″
4. Rated current: 13A
5. Rohs applied

| | | | | | | |
|---|---|---|---|---|---|---|
| 宁波翔沣电气有限公司 NINGBO XF ELECTRONIC CO.,LTD | | | | | Name | Terminal |
| | | | | | DrawingNo | TS1062-16-0144 |
| | | | | | Material | COPPER ALLOY |
| Design | Zhang | 2025.4 | Revision | 01 | Color | |
| Proofread | Yang | 2025.4 | | | Weight Kg | |
| Approval | Zhang | 2025.4 | Scale | 5:1 | | Pages |