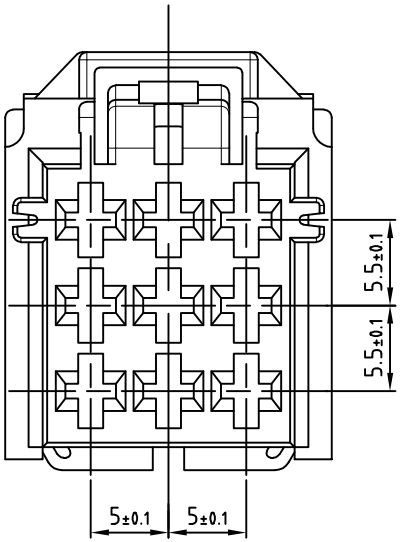

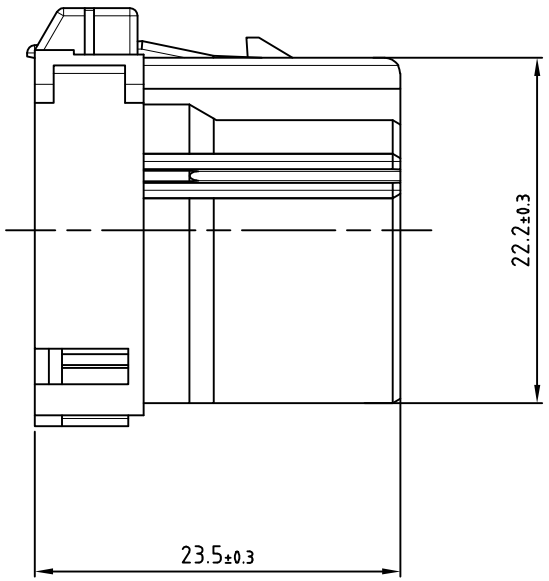

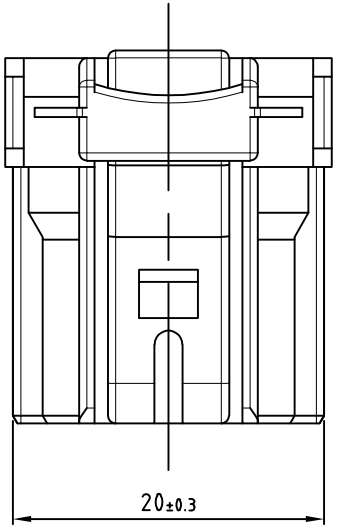

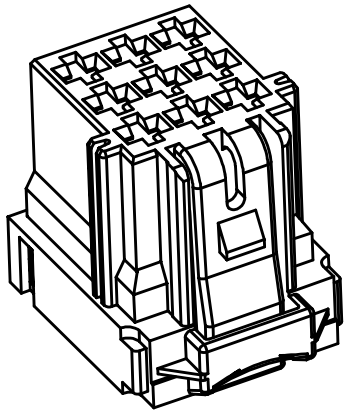

NOTE:

1.OPERATING TEMPERATURE: −40℃ TO +120℃.

宁波翔沣电气有限公司 NINGBO XF ELECTRONIC CO.,LTD					Name	Connector
					DrawingNo	XF7-968971-1
					Material	PA66+GF13
Design	Yang	2025.6	Revision	01	Color	White
Proofread	Yang	2025.6			Weight Kg	
Approval	Zhang	2025.6	Scale	3:1		Pages