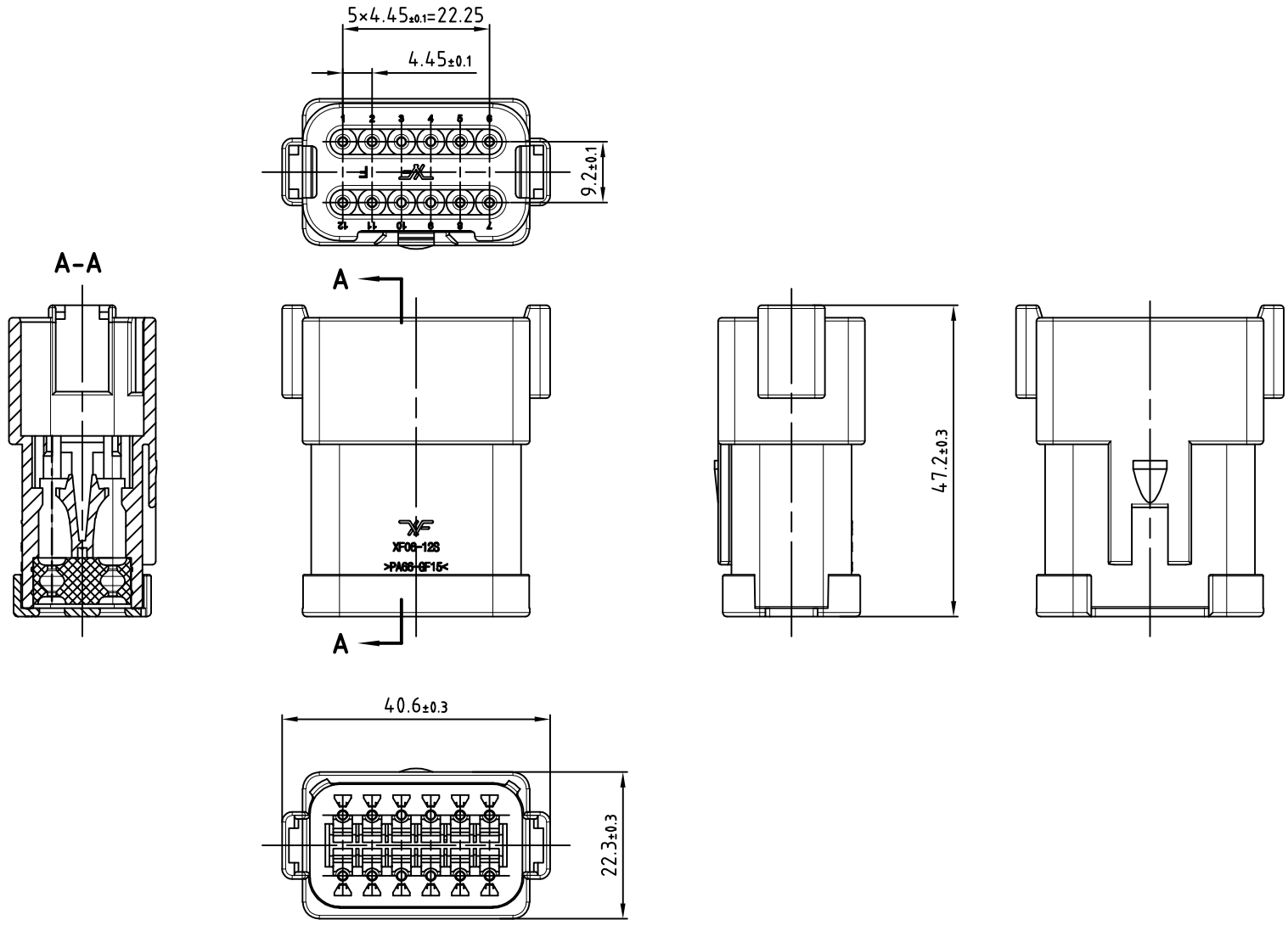

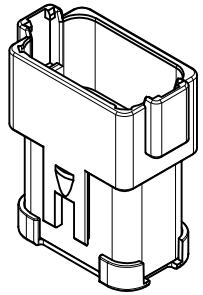

NOTES:

1.CURRENT RATING: 13A MAXIMUM.

2.OPERATING TEMPERATURE: −55℃ TO +125℃.

3.MOISTURE RESISTANCE:IP68,IP6K9K.

宁波翔沣电气有限公司 NINGBO XF ELECTRONIC CO.,LTD					Name	Connector
					DrawingNo	XFDT04-12PA-CE03
					Material	PA66+GF15
Design	Lai	2025.7	Revision	01	Color	Black
Proofread	Yang	2025.7			Weight Kg	
Approval	Zhang	2025.7	Scale	1.5:1		Pages