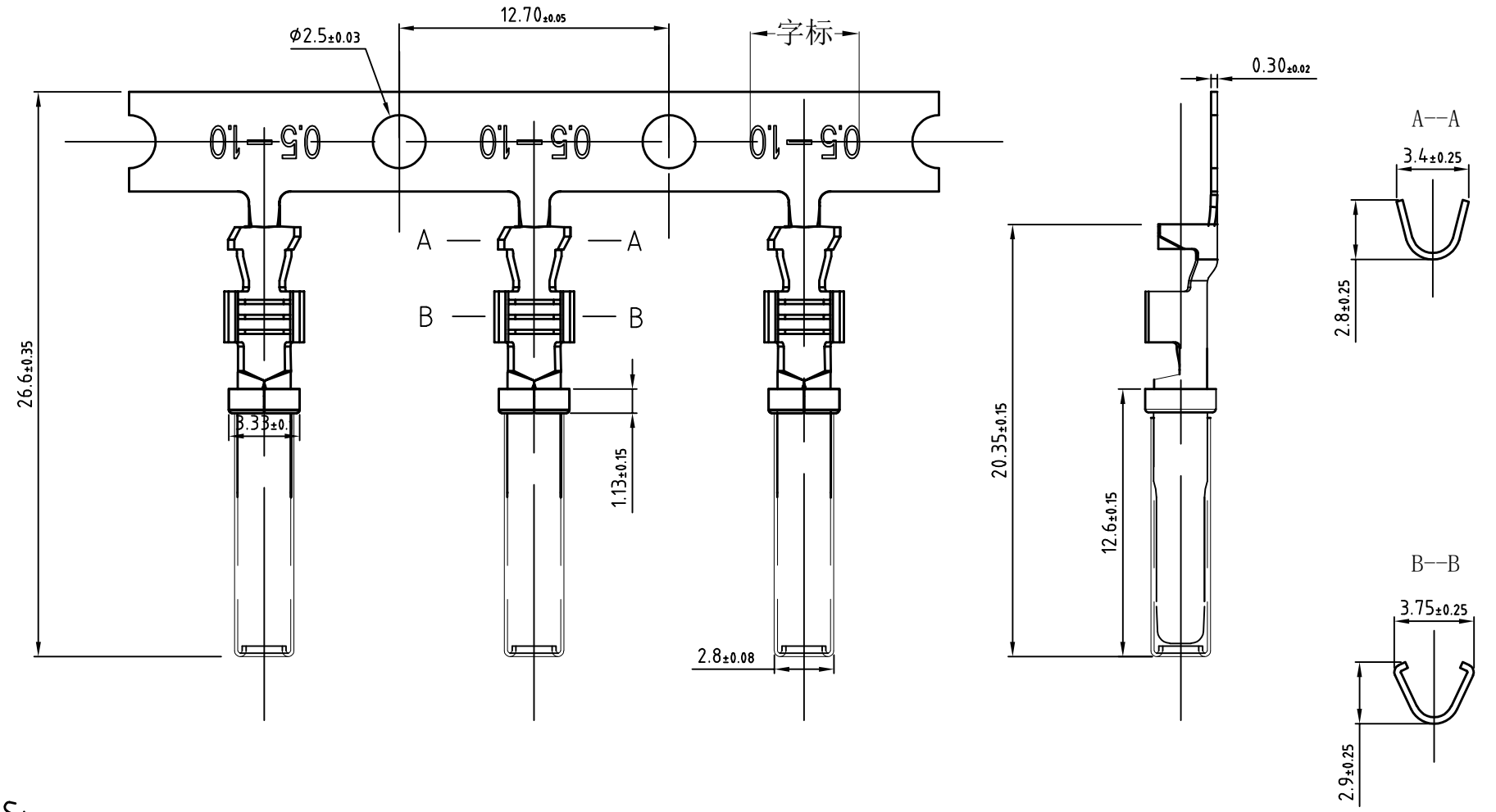

NOTES:

1.No burrs on the surface, R=0.2 if not specified.

2.Material:CuSn6

3.Electroplating specifications: Half gold-nickel, nickel base 1-2.5um, local gold plating 3u".

4.Crimp specification:0.5-1.0mm^2 (20-16Awg) wire press.

5.Rated current:13A

6.Environmental protection meets ROHS 2.0 standard.

宁波翔沣电气有限公司 NINGBO XF ELECTRONIC CO.,LTD					Name	Terminal
					DrawingNo	TS1062-16-0644
					Material	CuSn6
Design	Zhang	2025.8	Revision	01	Color	
Proofread	Yang	2025.8			Weight Kg	
Approval	Zhang	2025.8	Scale	5:1		Pages