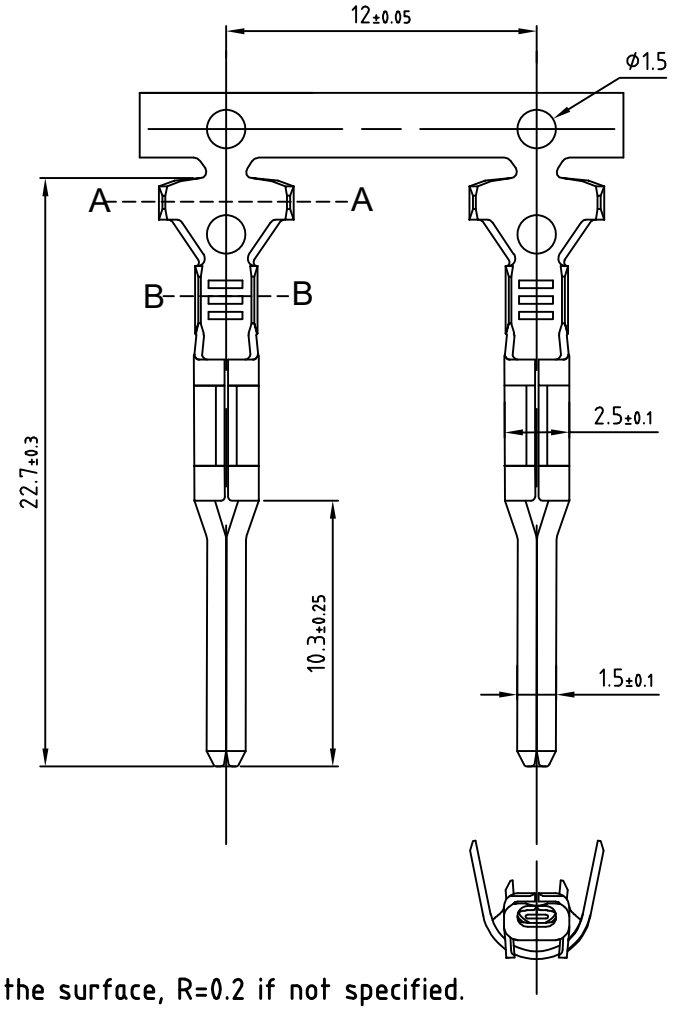

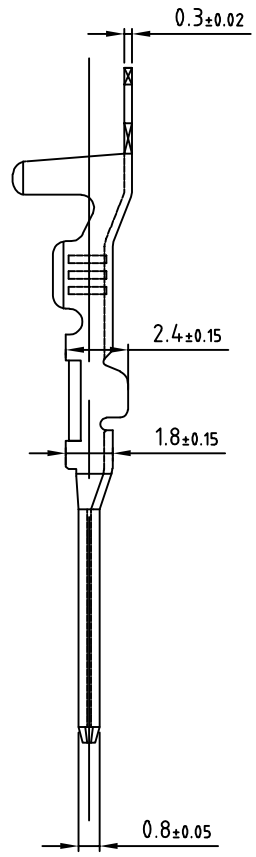

A--A

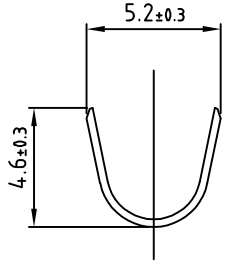

B--B

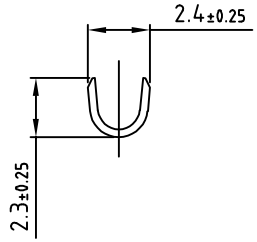

NOTES:

1.No burrs on the surface, R=0.2 if not specified.
2.Material:C2680
3.Electroplating specifications: Hot dip galvanizing,electroplating followed by stamping,tin plating 1-3um.
4.Crimp specification: 0.35-0.5mm^2.
5.Rated current:6A
6.Environmental protection meets ROHS 2.0 standard.

宁波翔沣电气有限公司 NINGBO XF ELECTRONIC CO.,LTD					Name	Terminal
					DrawingNo	TS282404-1
					Material	C2680
Design	Zhang	2025.9	Revision	01	Color	
Proofread	Yang	2025.9			Weight Kg	
Approval	Zhang	2025.9	Scale	5:1		Pages