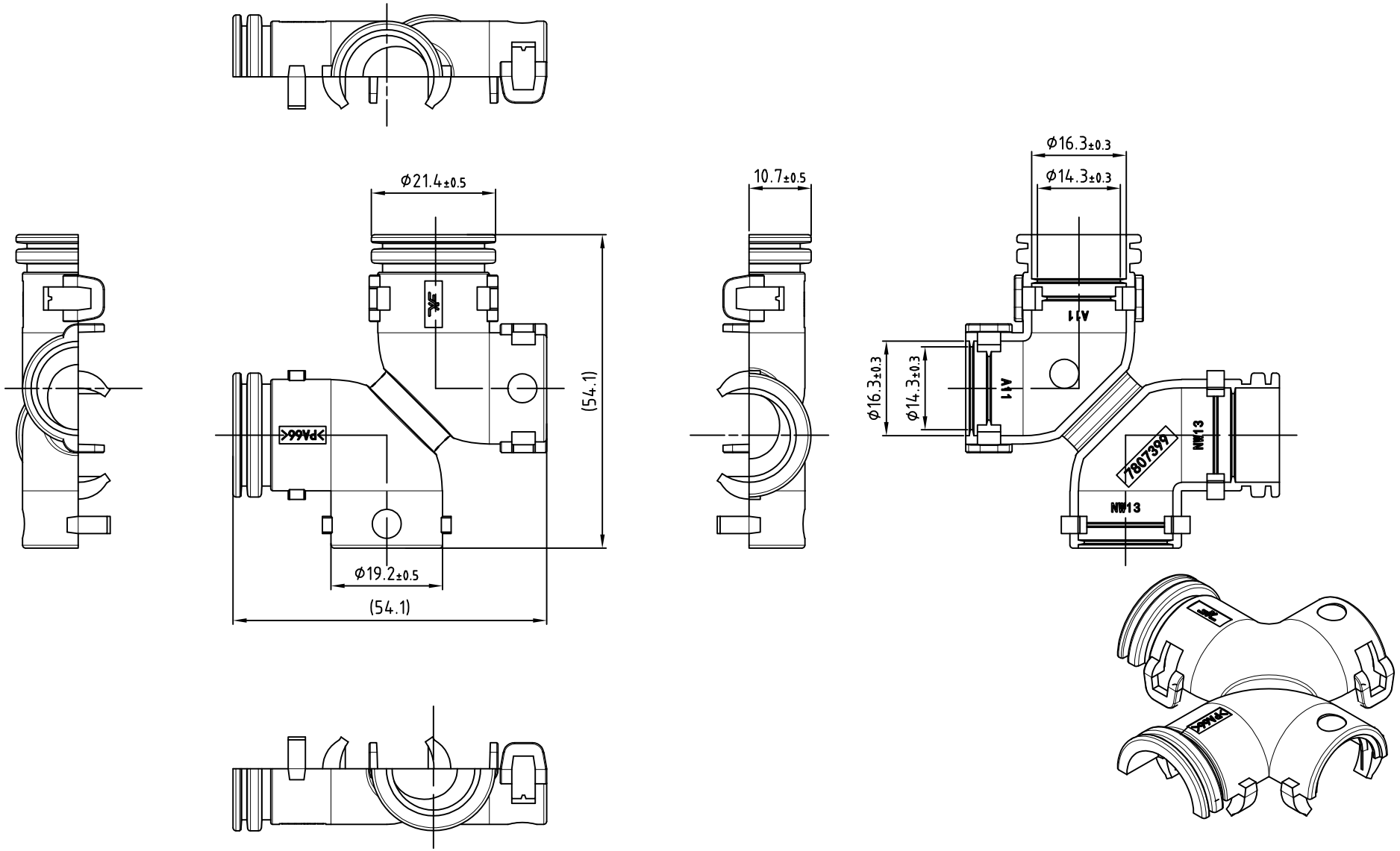

NOTES:

1.Working temperature range: -40℃ TO +125℃.

2.UL Flame resistance rating:UL-94 HB

宁波翔沣电气有限公司 NINGBO XF ELECTRONIC CO.,LTD					Name	Manifolds
					DrawingNo	XF7807399
					Material	PA66
Design	Lai	2025.9	Revision	01	Color	Black
Proofread	Yang	2025.9			Weight Kg	
Approval	Zhang	2025.9	Scale	1.5:1		Pages