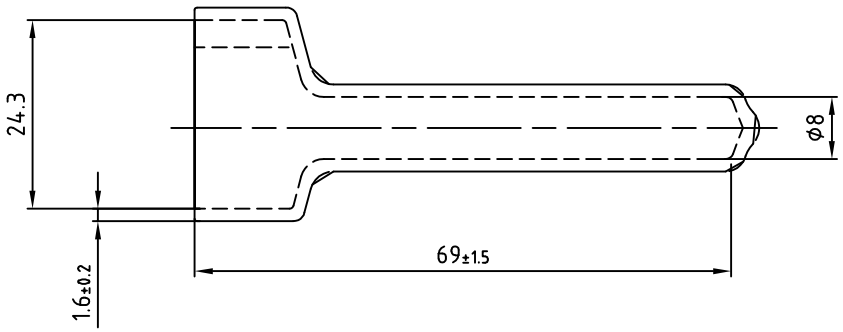

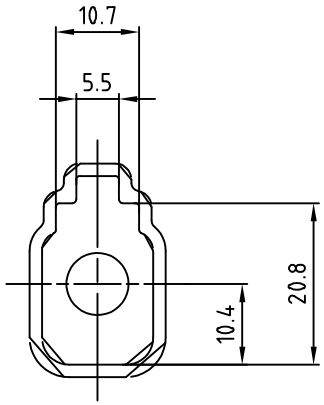

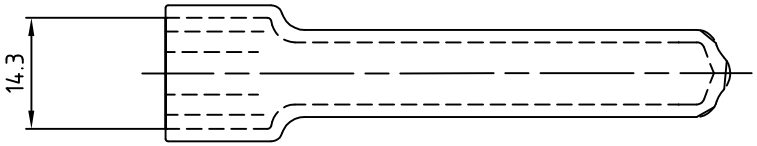

NOTES:

1.Completely plasticized, cannot be torn by hand;
surface without damage; no burning, no impurities; no holes allowed
2.Shore hardness 60 ± 5A
3.Unmarked size tolerance ±0.5
4.Material meets RoHS requirements

宁波翔沣电气有限公司 NINGBO XF ELECTRONIC CO.,LTD					Name	Dust cap
					DrawingNo	XFKFBQ20.8-14.3-69
					Material	PVC
Design	Lai	2025.11	Revision	01	Color	Grey
Proofread	Yang	2025.11			Weight Kg	
Approval	Zhang	2025.11	Scale	1.5:1		Pages