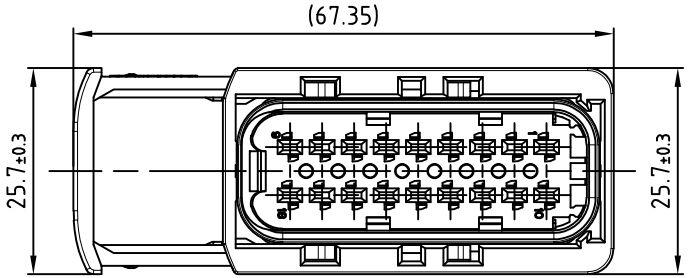

A-A

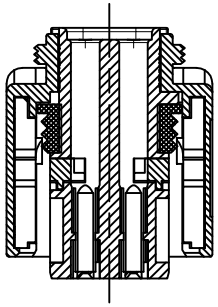

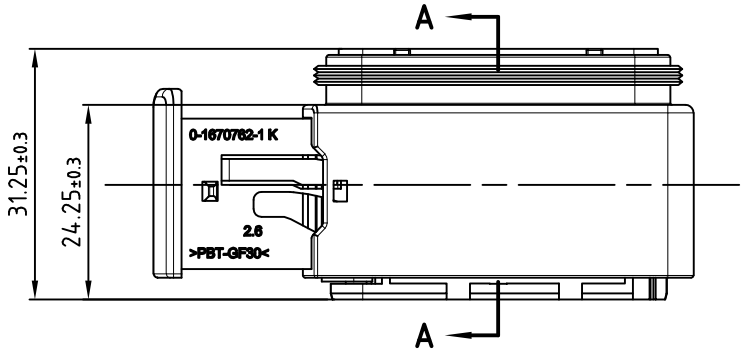

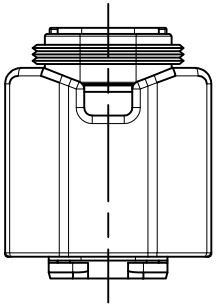

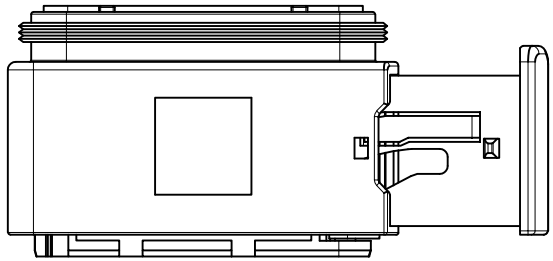

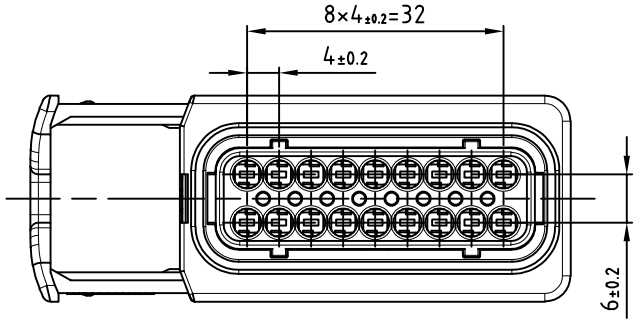

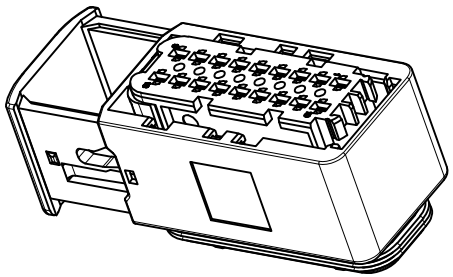

NOTES:

1.Rated current (maximum): 20A.

2.Working temperature range: -40℃ TO +125℃.

3.Moisture resistance:IP67.

4.UL Flame resistance rating:UL-94 HB

5.Electrical characteristics:

Working voltage(VDC):60

Rated voltage configuration(V):12 | 24 | 48

宁波翔沣电气有限公司 NINGBO XF ELECTRONIC CO.,LTD					Name	Connector
					DrawingNo	XF7182-1.5-21Gr
					Material	PBT+GF30
Design	Zhang	2026.1	Revision	01	Color	Grey
Proofread	Yang	2026.1			Weight Kg	
Approval	Zhang	2026.1	Scale	1.5:1		Pages