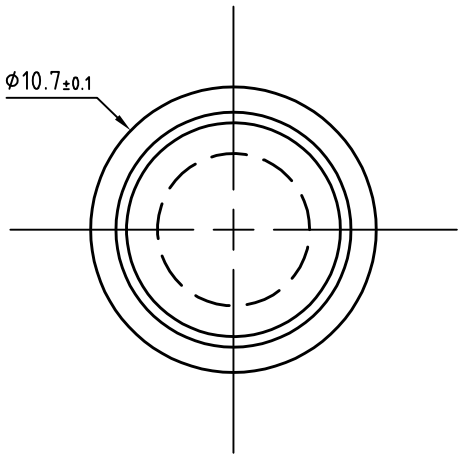

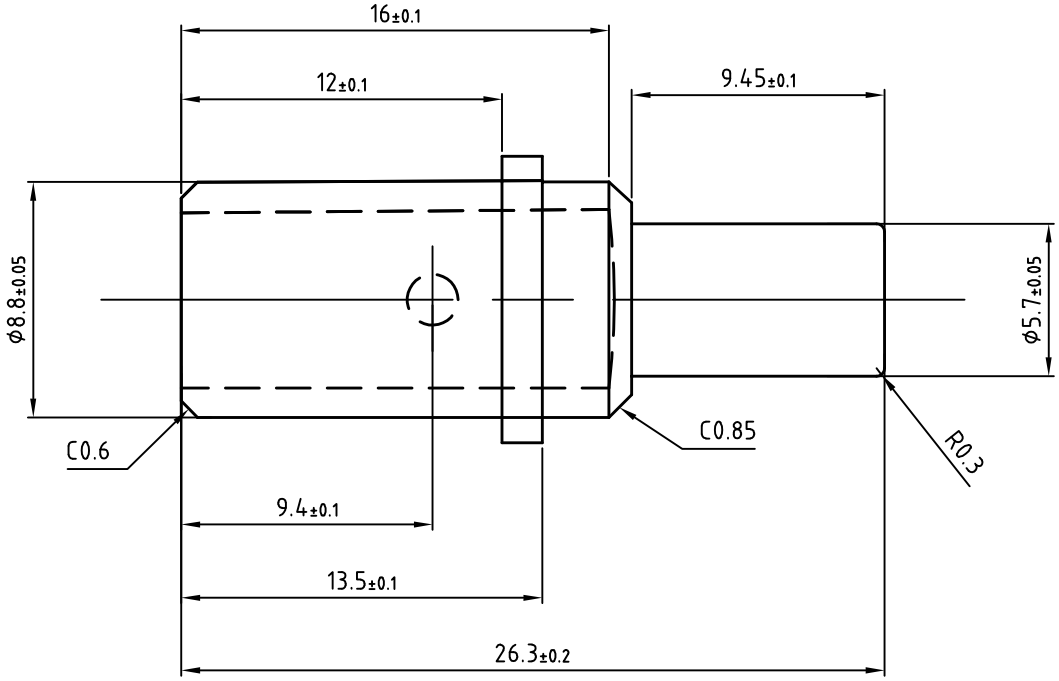

NOTES:

1.No burrs on the surface, R=0.2 if not specified.
2.Electroplating specifications: Surface Nickel Plating.
3.Crimp specification: 4Awg.
4.Environmental protection meets ROHS 2.0 standard.

宁波翔沣电气有限公司 NINGBO XF ELECTRONIC CO.,LTD					Name	Terminal
					DrawingNo	0460-204-04141
					Material	COPPER ALLOY
Design	Zhang	2026.3	Revision	01	Color	
Proofread	Yang	2026.3			Weight Kg	
Approval	Zhang	2026.3	Scale	5:1		Pages