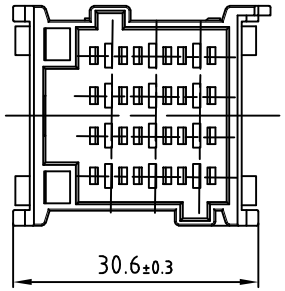

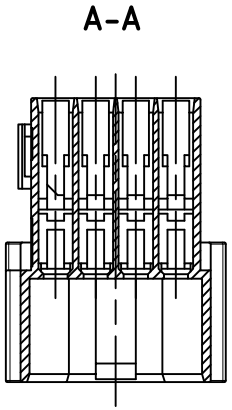

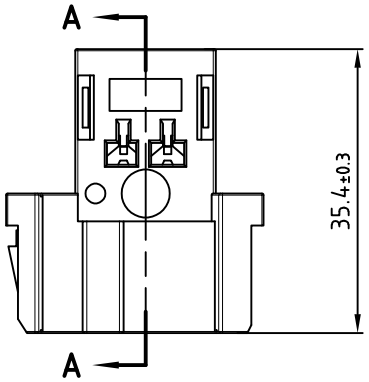

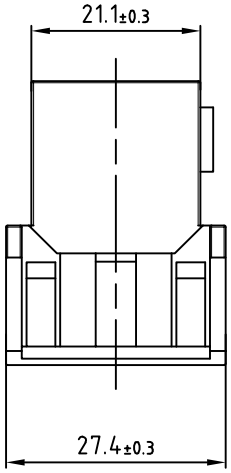

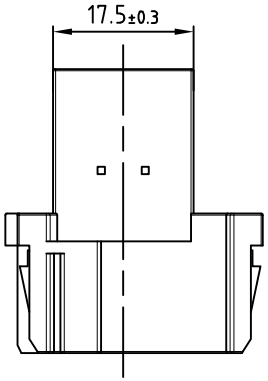

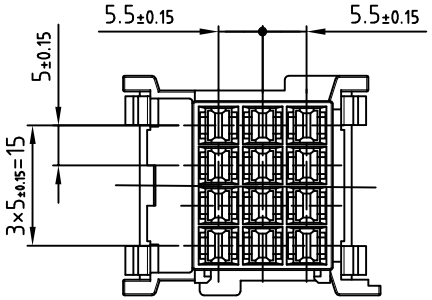

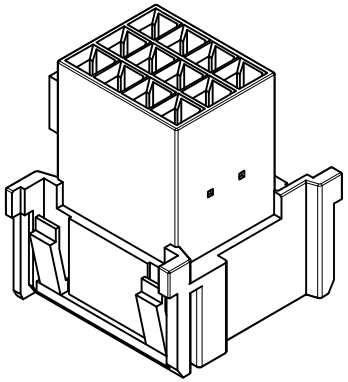

NOTES:

1.Working temperature range: -40℃ TO +125℃.

2.UL Flame resistance rating:UL-94 HB

3.Electrical characteristics:

Working voltage(VDC):28

Rated voltage configuration(V):12 | 24

宁波翔沣电气有限公司 NINGBO XF ELECTRONIC CO.,LTD					Name	Connector
					DrawingNo	XF70121-2.8-11Gr
					Material	PA66+GF13
Design	Lai	2026.5	Revision	01	Color	Grey
Proofread	Yang	2026.5			Weight Kg	
Approval	Zhang	2026.5	Scale	1.5:1		Pages