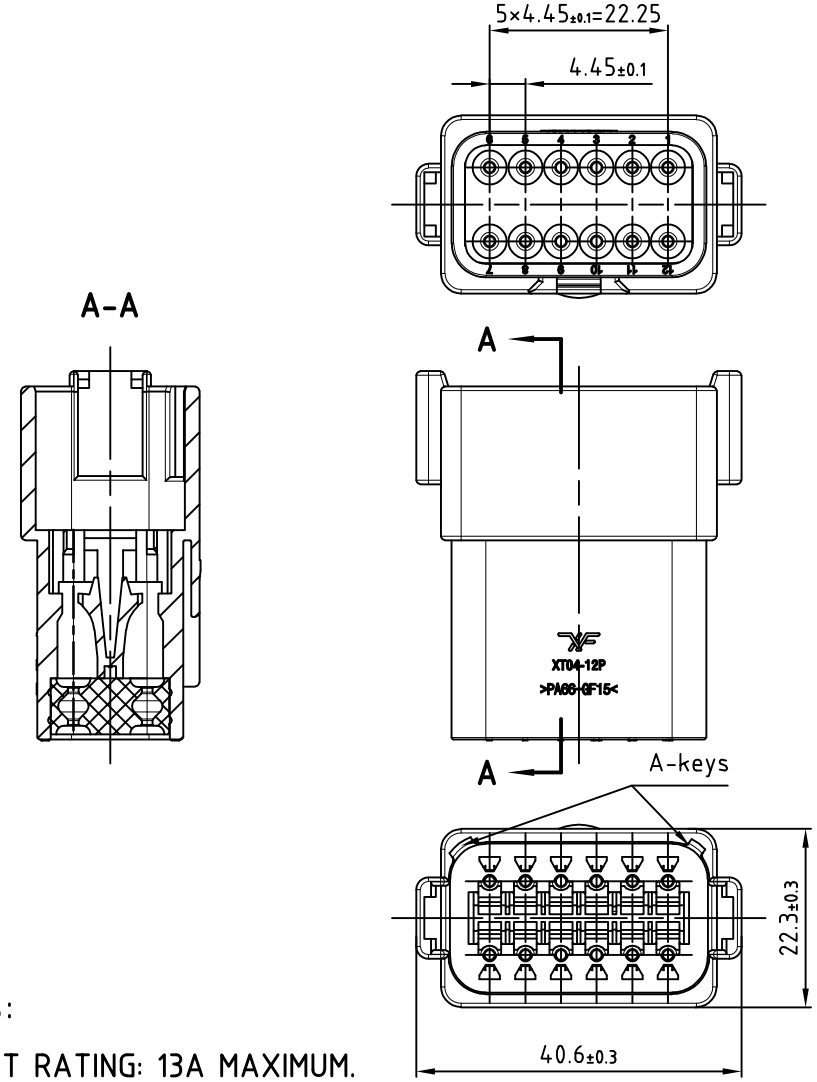

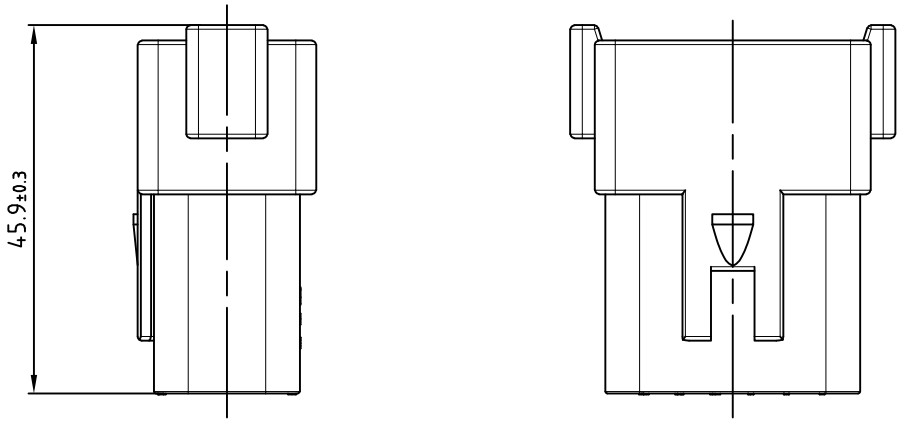

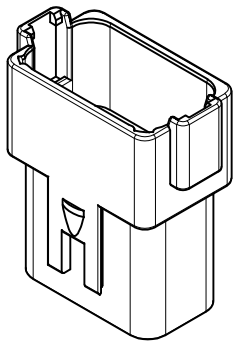

NOTES:

1.CURRENT RATING: 13A MAXIMUM.

2.OPERATING TEMPERATURE: -55℃ TO +125℃.

3.MOISTURE RESISTANCE:IP68,IP6K9K.

4.UL Flame Resistance Rating:UL-94 V0

5.Electrical characteristics:

Working voltage(VDC):250

Working voltage(VAC):250

Rated voltage configuration V):12 | 24 | 48

宁波翔沣电气有限公司 NINGBO XF ELECTRONIC CO.,LTD					Name	Connector
					DrawingNo	XT04-12PA
					Material	PA66+GF15
Design	Zhang	2025.7	Revision	01	Color	Grey
Proofread	Yang	2025.7			Weight Kg	
Approval	Zhang	2025.7	Scale	1.5:1		Pages